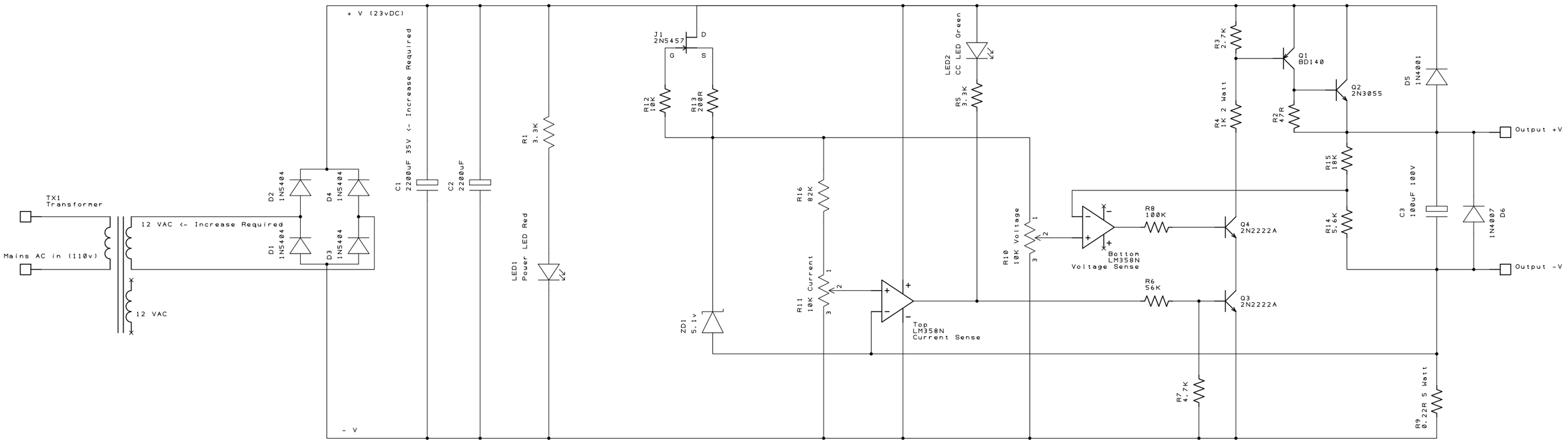
+ V (23vDC)
- V
TX1
Transformer
Mains AC in (110v)
12 VAC
12 VAC <- Increase Required
D1
1N5404
D2
1N5404
D3
1N5404
D4
1N5404
C1
2200uF 35V <- Increase Required
C2
2200uF
R1
3.3K
LED1
Power LED Red
J1
2N5457
D
G
S
R12
10K
R13
200R
ZD1
5.1v
R16
82K
R11
10K Current
Top
LM358N
Current Sense
LED2
CC LED Green
R5
3.3K
R10
10K Voltage
Bottom
LM358N
Voltage Sense
R8
100K
R6
56K
R7
4.7K
R3
2.7K
R4
1K 2 Watt
Q1
BD140
Q2
2N3055
Q3
2N2222A
Q4
2N2222A
R2
47R
R15
18K
R14
5.6K
D5
1N4001
C3
100uF 100V
D6
1N4007
R9
0.22R 5 Watt
Output +V
Output -V