3.18 MONITOR UNIT (INVERTER)

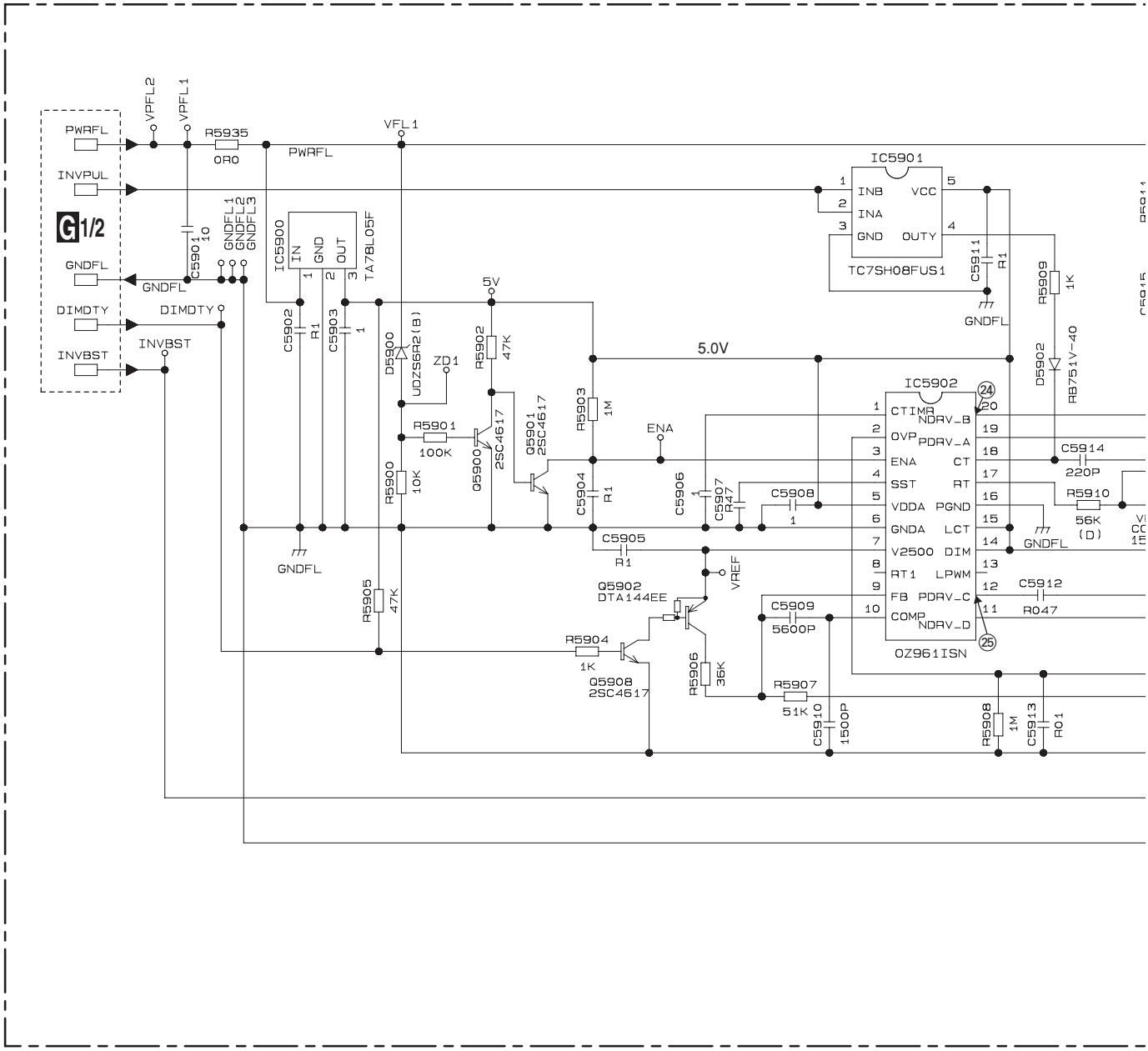

G2/2